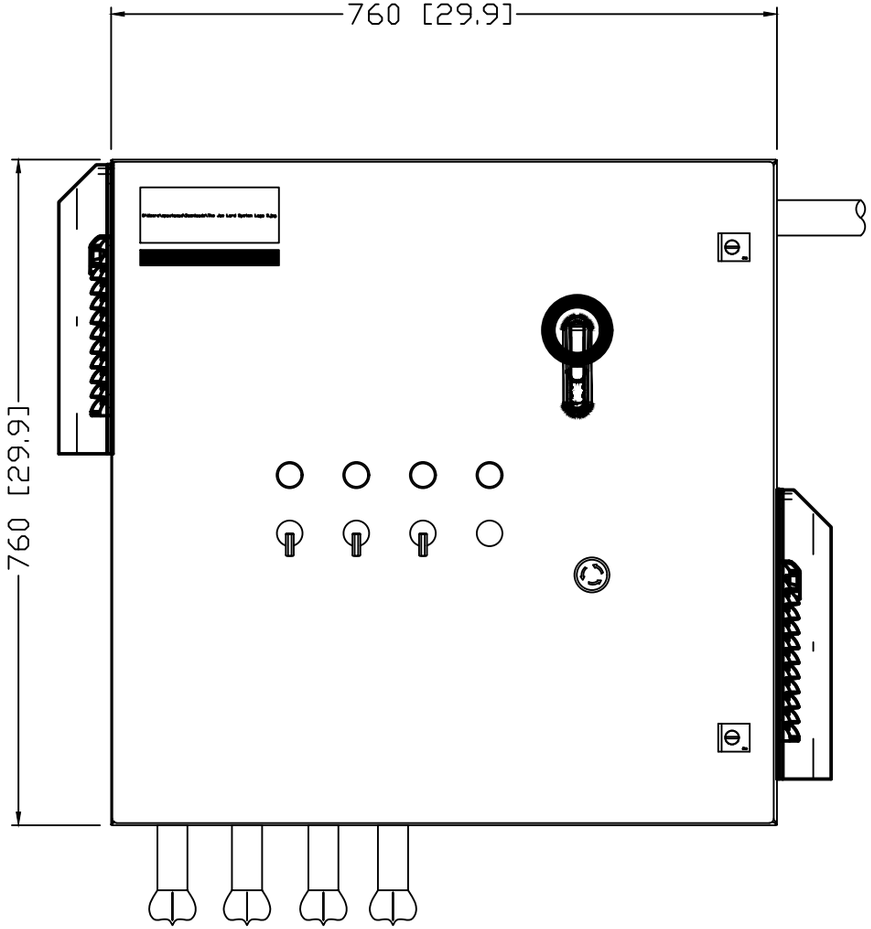

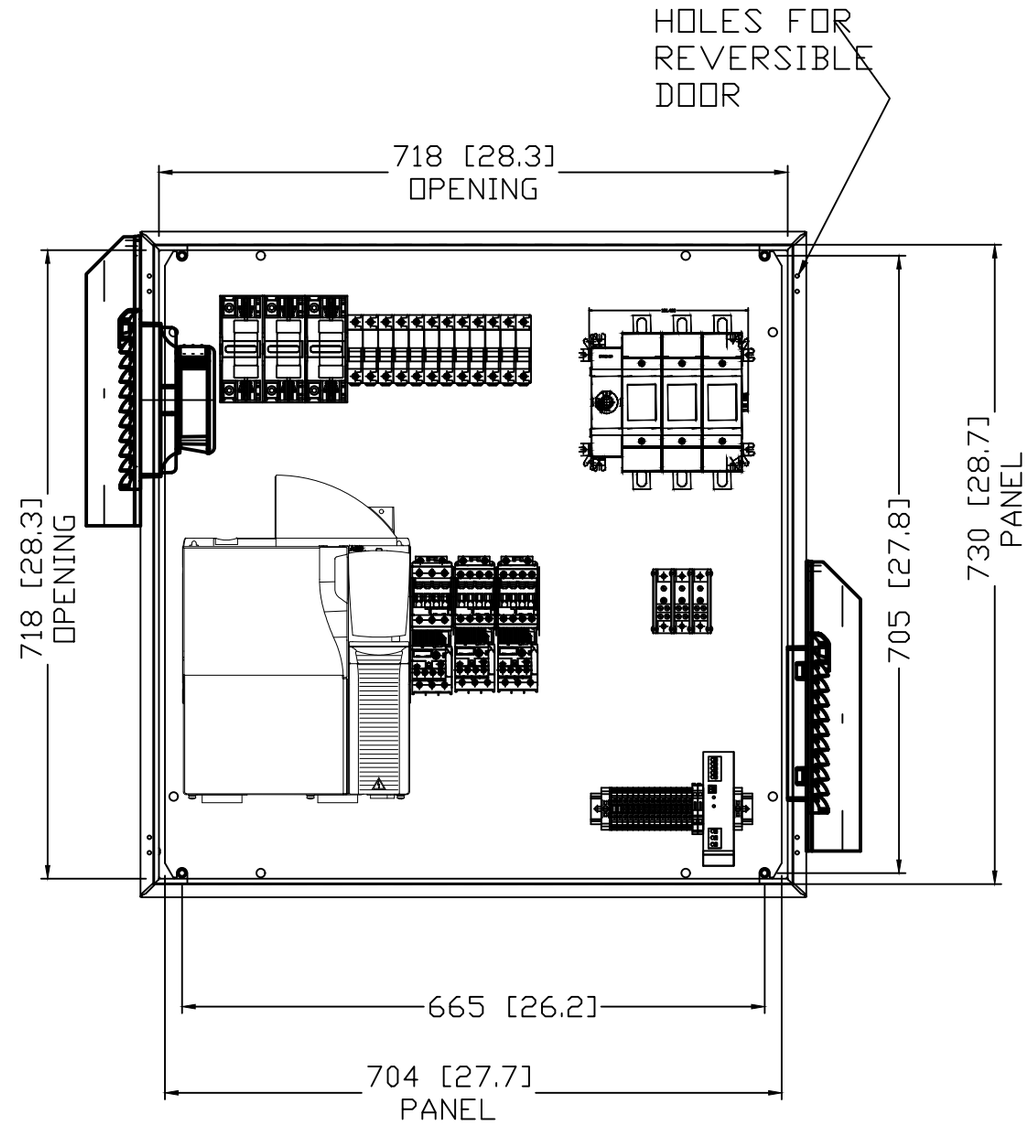

P/m Integrated Solutions	NO.	REVISION	DATE	LORD ELECTRIC SCHEMATIC			
	DRAWN HLS 4/6/16	CHECK	SCALE	REVISION 1	DATE 4/6/16	DRAWING NO. 208V SALTMIXER	SHEET 1 OF 4

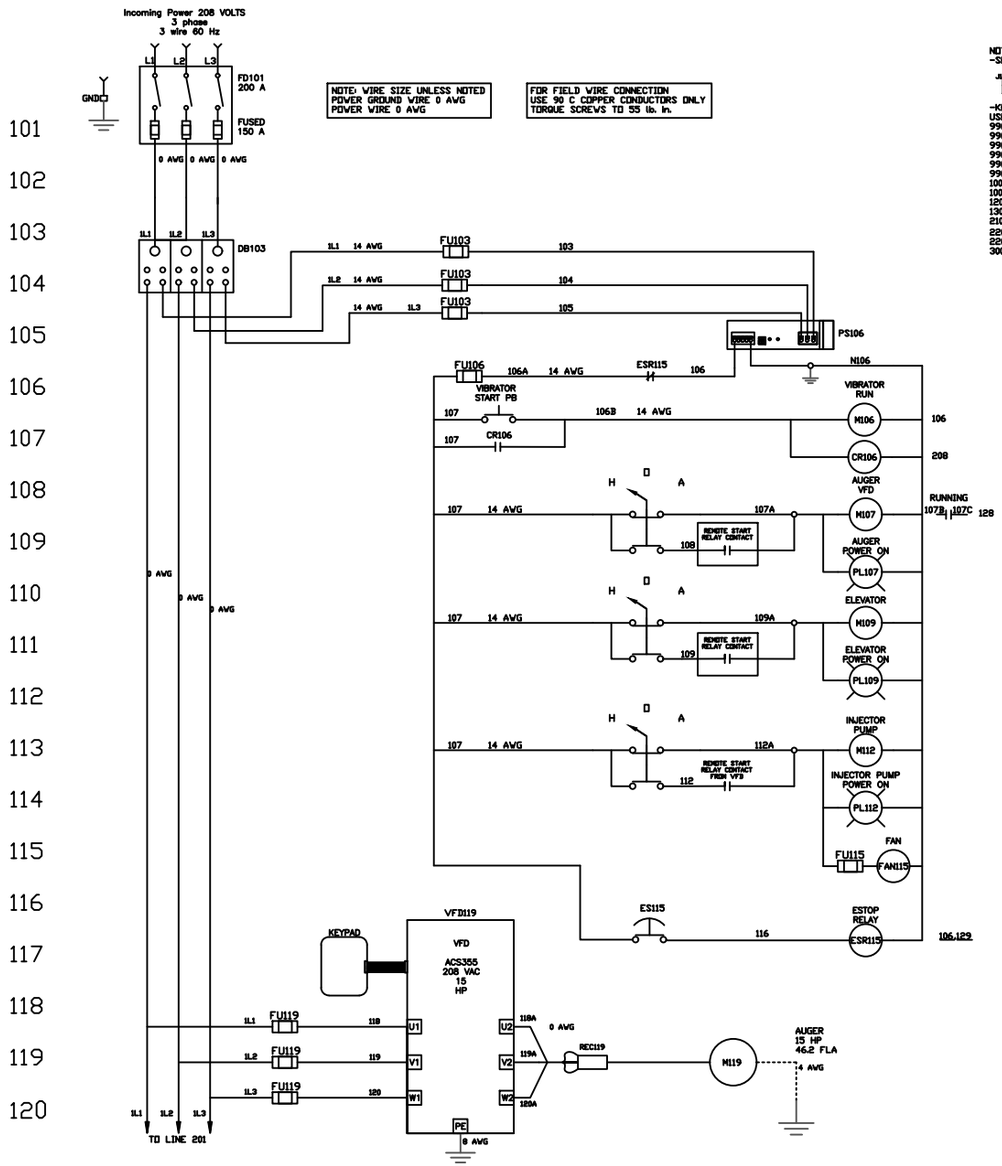

NOTES:
-SET SLIDE SWITCHES OR DIP SWITCHES AS SHOWN BELOW

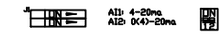

-KEYPAD MUST BE IN REMOTE (REM) POSITION
USE LOC/REM BUTTON KEYPAD
9901 - LANGUAGE = ENGLISH
9905 - MOTOR NAMEPLATE VOLTAGE = 480 VOLTS
9906 - MOTOR NAMEPLATE AMERAGE = 85 AMPS
9907 - MOTOR NAMEPLATE FREQUENCY = 60HZ
9908 - MOTOR NAMEPLATE SPEED = 1750 RPM
9909 - MOTOR NAMEPLATE HORSEPOWER = 75 HP
1001 - EXT1 COMMANDS = DI1
1003 - DIRECTION = FORWARD
1201 - CONSTANT SPEED = NOT SELECT
1301 - MIN. AI1 = 20%
2109 - EMERG STOP SEL =DI2 (INV)
2201 - ACC/DEC 1 SEL = NOT SELECT
2208 - EMERG DEC TIME = 5 SEC.
3003 - EXTERNAL FAULT 1 = DI3 (INV)

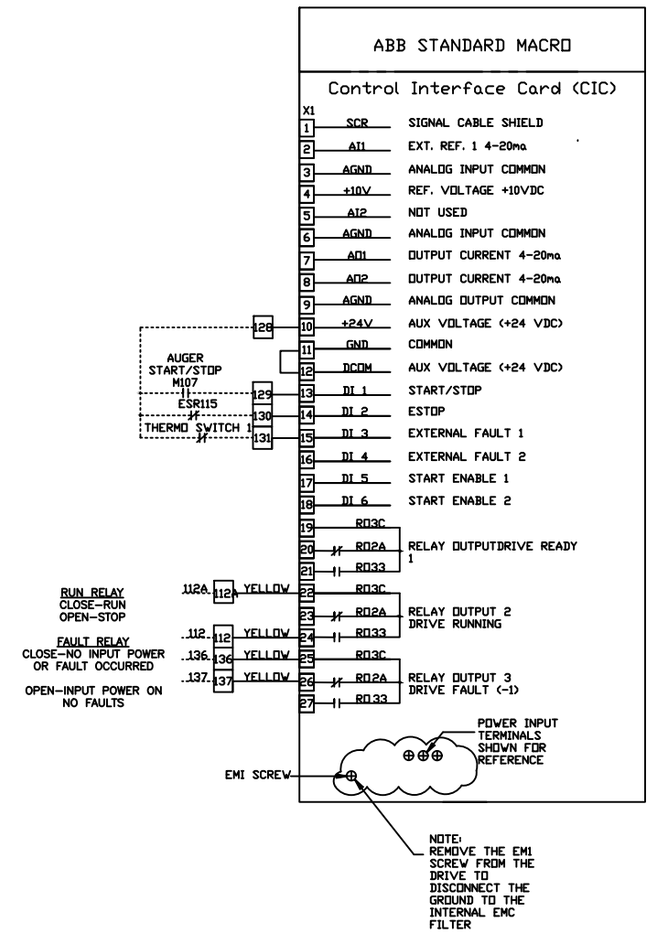

P/m Integrated Solutions	NO. REVISION		DATE	LORD ELECTRIC SCHEMATIC			
	DRAWN HLS 4/6/16	CHECK	SCALE	REVISION 1	DATE 4/6/16	DRAWING NO. 208V SALTMIXER	SHEET 2 OF 4

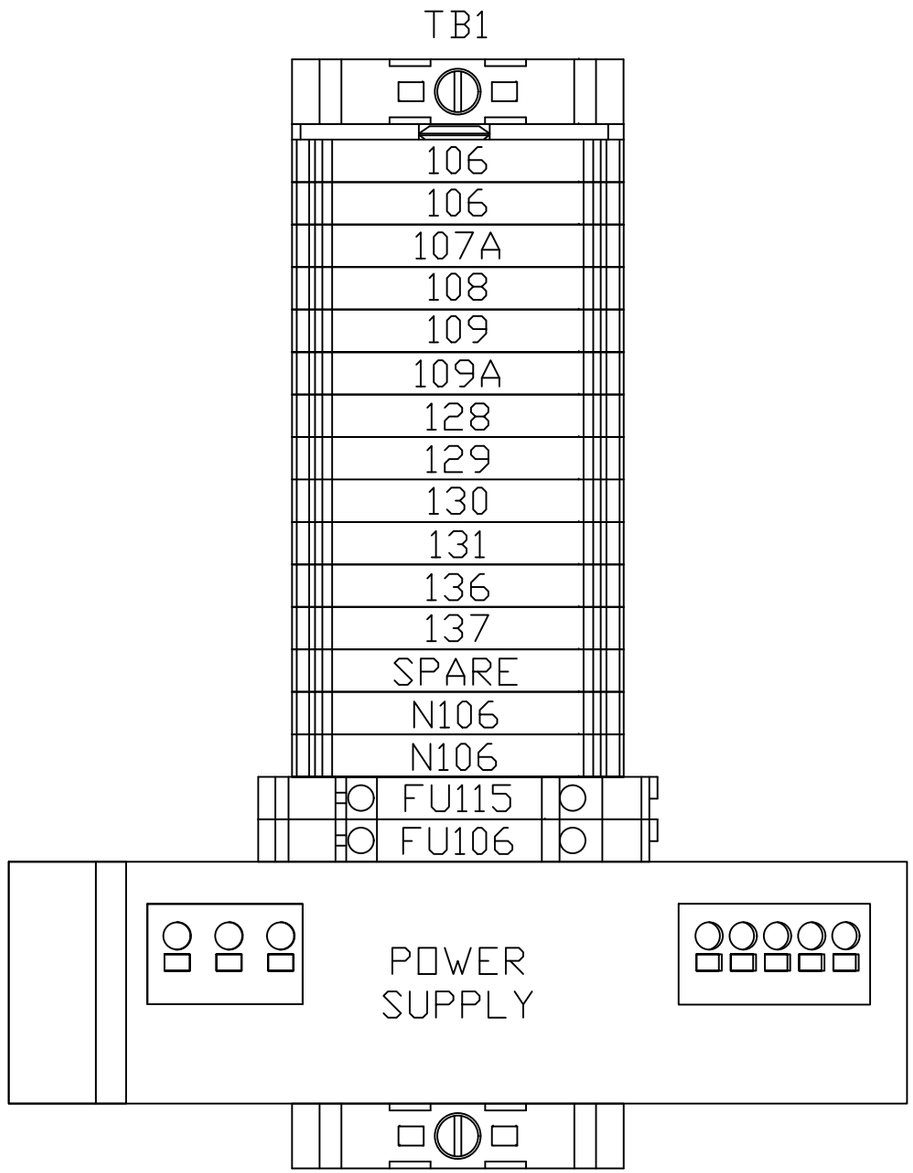

NO.	REVISION	DATE

P/m Integrated Solutions

LORD ELECTRIC
SCHEMATIC

DRAWN	CHECK	SCALE	REVISION	DATE	DRAWING NO.	SHEET
HLS 4/6/16			1	4/6/16	208V SALTMIXER	3 OF 4

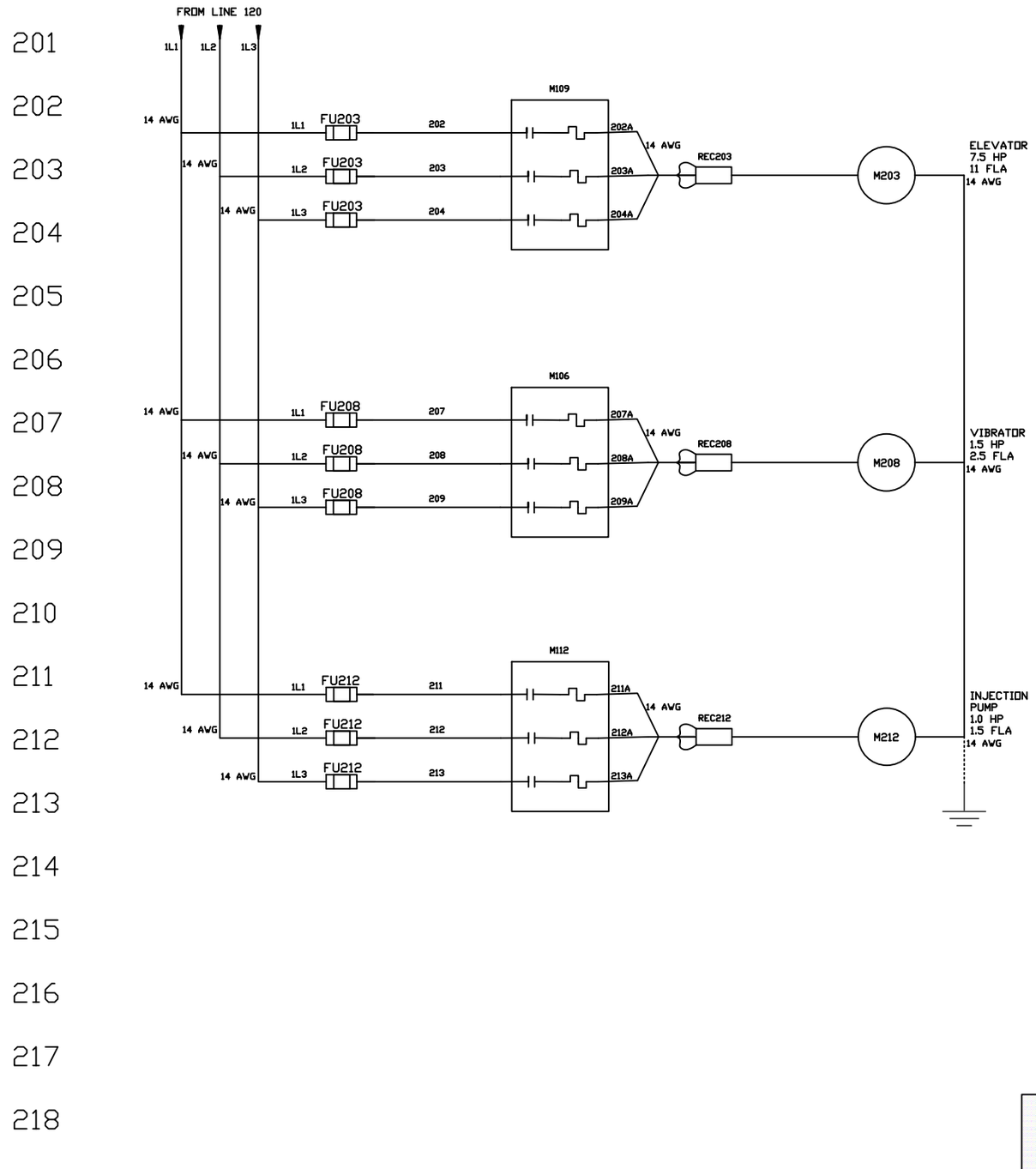

NO.	REVISION	DATE

P/m Integrated Solutions

LORD ELECTRIC
SCHEMATIC

DRAWN	CHECK	SCALE	REVISION	DATE	DRAWING NO.	SHEET
HLS 4/6/16			1	4/6/16	208V SALTMIXER	4 OF 4